antenna conceptor

Product Datasheet

2J6700BGF

CELLULAR and GNSS Screw Mount

Key Features

Cable 1: CELLULAR
- 824-960 MHz
- 1710-2170 MHz

Cable 2: GPS/GLONASS/QZSS/Galileo
- 1575-1606 MHz

Screw Mount
Anti-Rotation Mechanism
Ground Plane Independent
Customizable Cable and Connector
Certificates: IP67, IP69K,
IK09 and IK10 version possible
Dimensions Ø 77.3 x 37.8 mm

1. Antenna and electrical specifications

Cable 1

Parameters	CELLULAR Antenna	
Standards	2G/3G	
Band (MHz)	850/900	1700/1800/1900/2100
Frequency (MHz)	824-960	1710-2170
Return Loss (dB)	~-7.0	~-9.0
VSWR	~2.8:1	~2.1:1
Efficiency (%)	~19.5	~14.1
Peak Gain (dBi)	~-3.2	~-2.1
Average Gain (dB)	~-8.0	~-8.6
Impendance (Ohm)	50	
Polarisation	Linear	
Radiation Pattern	Omni-Directional	
Max. Input Power (W)	25	
Connector Type	SMA-Male (Other Connectors Available)	
Cable Length	300 cm (Any Cable Length Available)	
Cable Type	RG174 (Other Cables Available)	

Cable 2

Parameters	GPS/GLONASS Antenna	
Standard	GPS/QZSS/Galileo	GLONASS
Band (MHz)	1575	1602
Frequency(MHz)	1575.42	1598-1606
Patch Size (mm)	25 x 25 x 4	
Return Loss (dB)	<=-15.0 dB	
VSWR	<=1.4:1 dB	
Impedance	50	
Radiation Pattern	Hemispherical	
Polarization	RHCP	
Saw Filter	Post-filter	
Active Gain (dB)	26 @ 3 V / 27 @ 5 V	
Noise Figure (dB)	1.5 Typ	
Voltage (V)	2.7 - 5.5	
Current (mA)	15-25	
Power Consumption (mW)	40-137	
Connector Type	SMA-Male Standard (Other Connectors Available)	
Cable Length	300 cm Standard (Any Cable Length Available)	
Cable Type	RG174 Standard (Other Cables Available)	

Antenna Measurement Conditions:

Mounted on 30 x 30 cm Ground Plane

200 cm RG174 Cable

Measured in Certified CTIA 3D Anechoic Chamber

2. Mechanical and environmental specifications

Specifications	2J6700BGF
Mounting Type	Screw Mount
Dimensions (mm)	Ø 77.3 x 37.8
Max. Tighten Torque (Nm)	6 Nm
Radome	ASA
Radome color	Black
Antenna Base	Zamak
Gasket	TPE
Operating Temperature (C)	-40 to +85
Storage Temperature (C)	-40 to +85
Substance Compliance	RoHS
Certificates	IP67, IP69K. IK09 and IK10 version possible with different material

3. Antenna parameters

Cable 1: CELLULAR

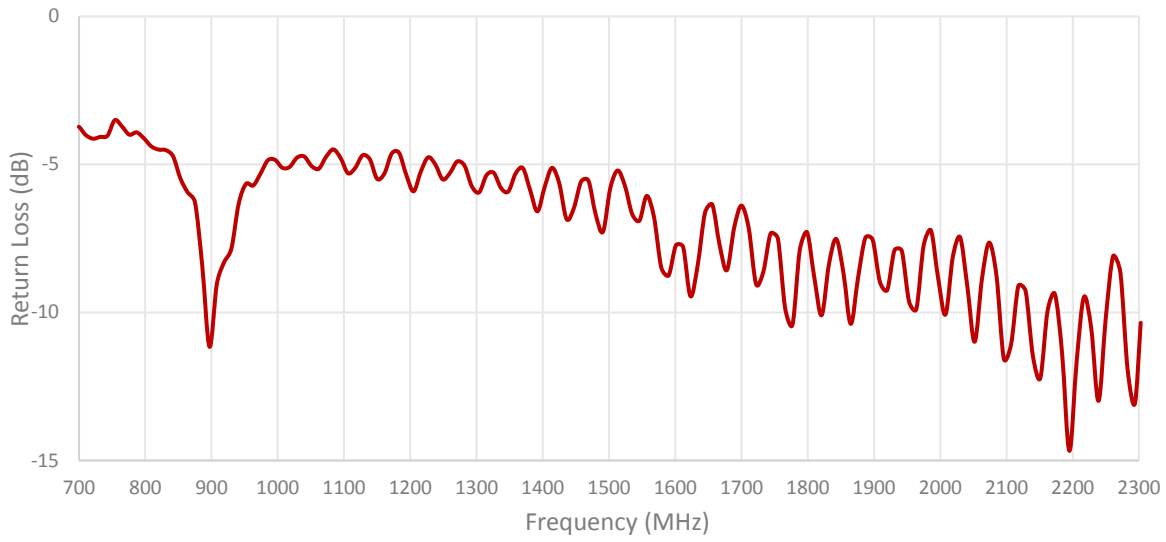

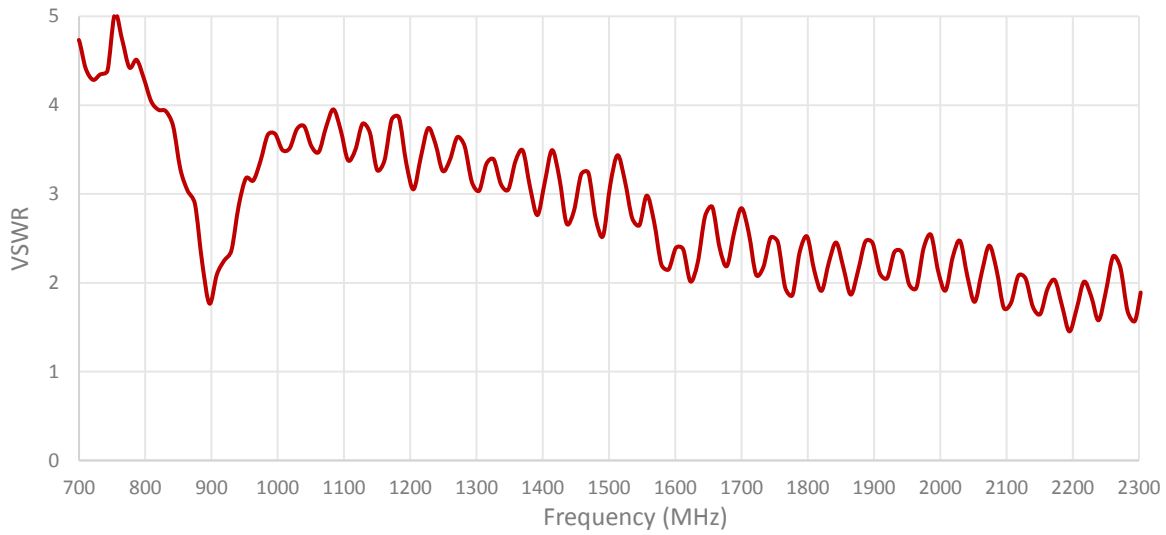

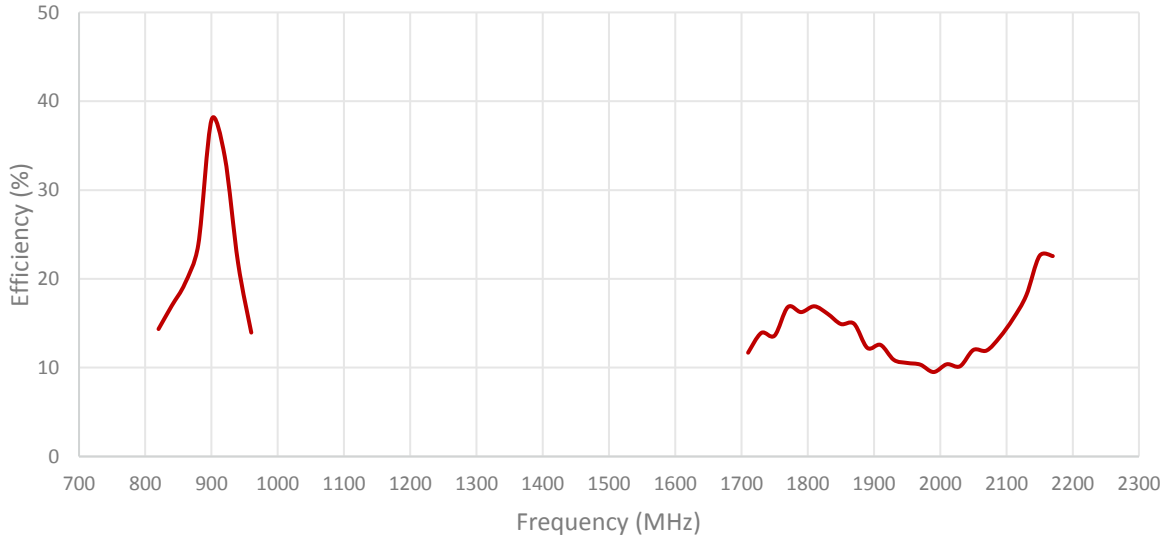
50
40
30
20
10
0
Efficiency (%)
700 800 900 1000 1100 1200 1300 1400 1500 1600 1700 1800 1900 2000 2100 2200 2300
Frequency (MHz)

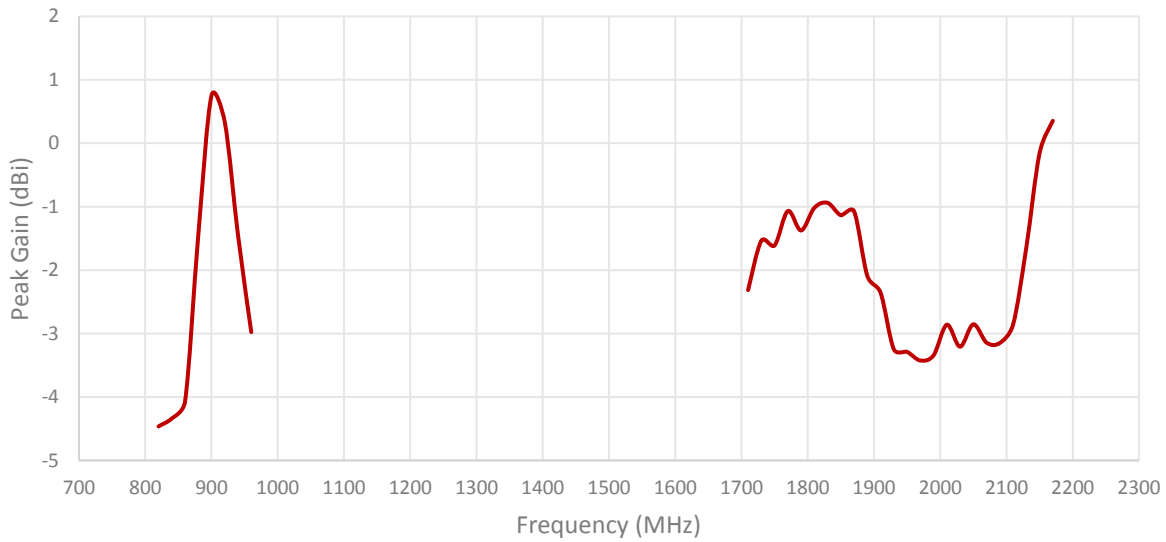
2
1
0
-1
-2
-3
-4
-5
Peak Gain (dBi)
700 800 900 1000 1100 1200 1300 1400 1500 1600 1700 1800 1900 2000 2100 2200 2300
Frequency (MHz)

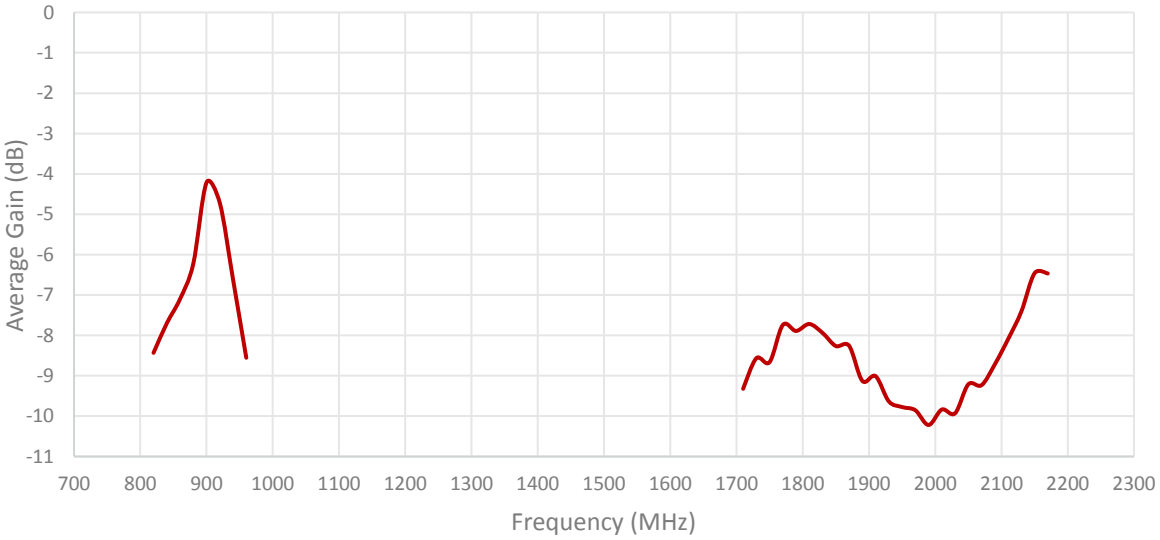

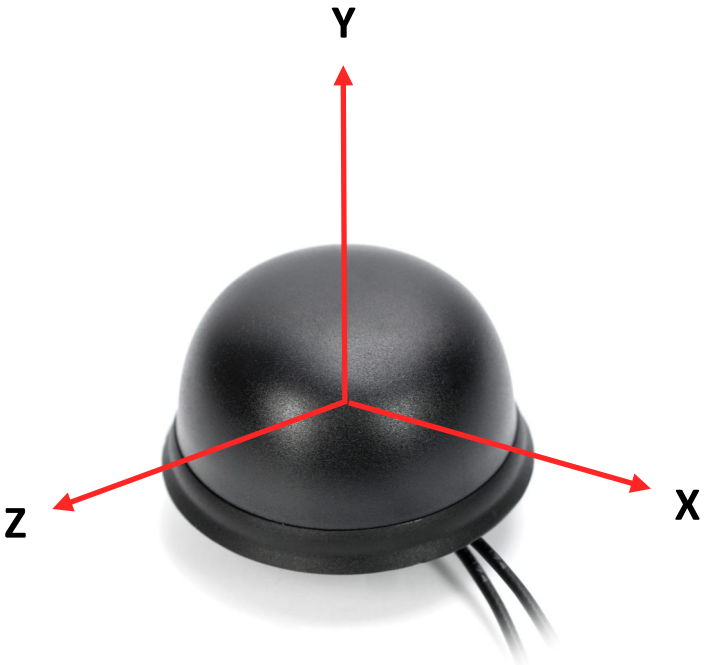

Radiation pattern reference

Cable 1: Cellular

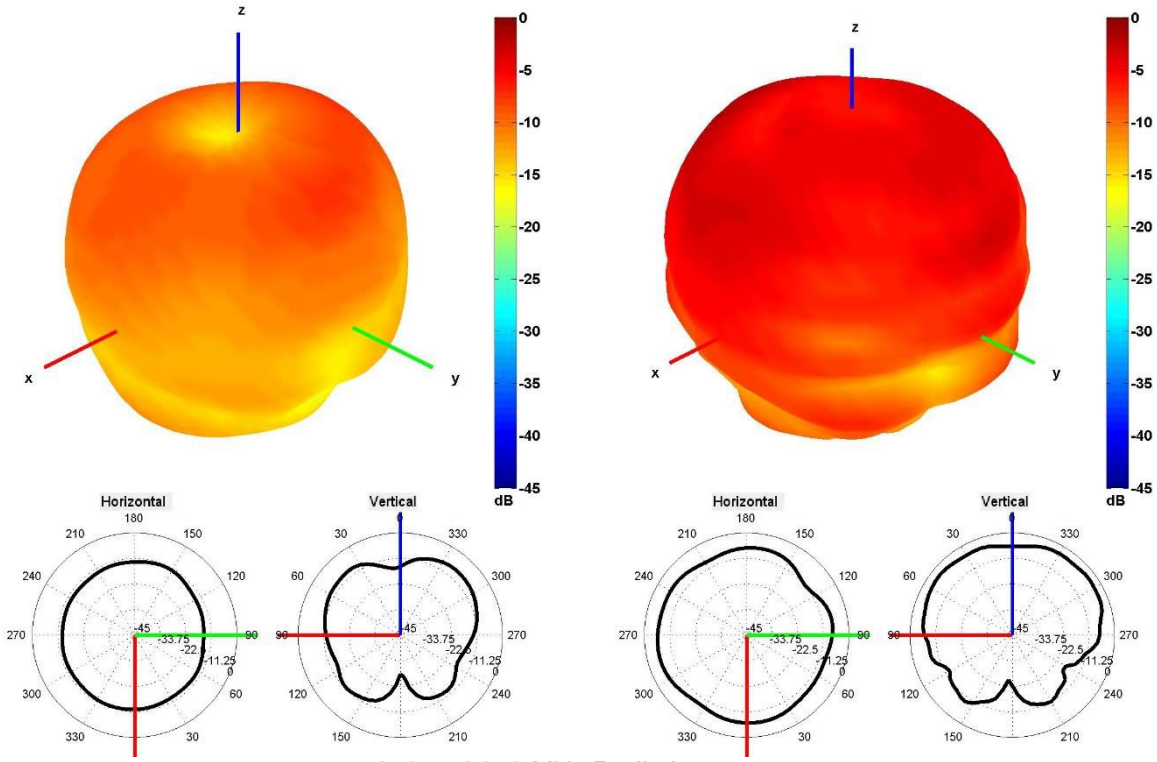

850 and 940 MHz Radiation pattern

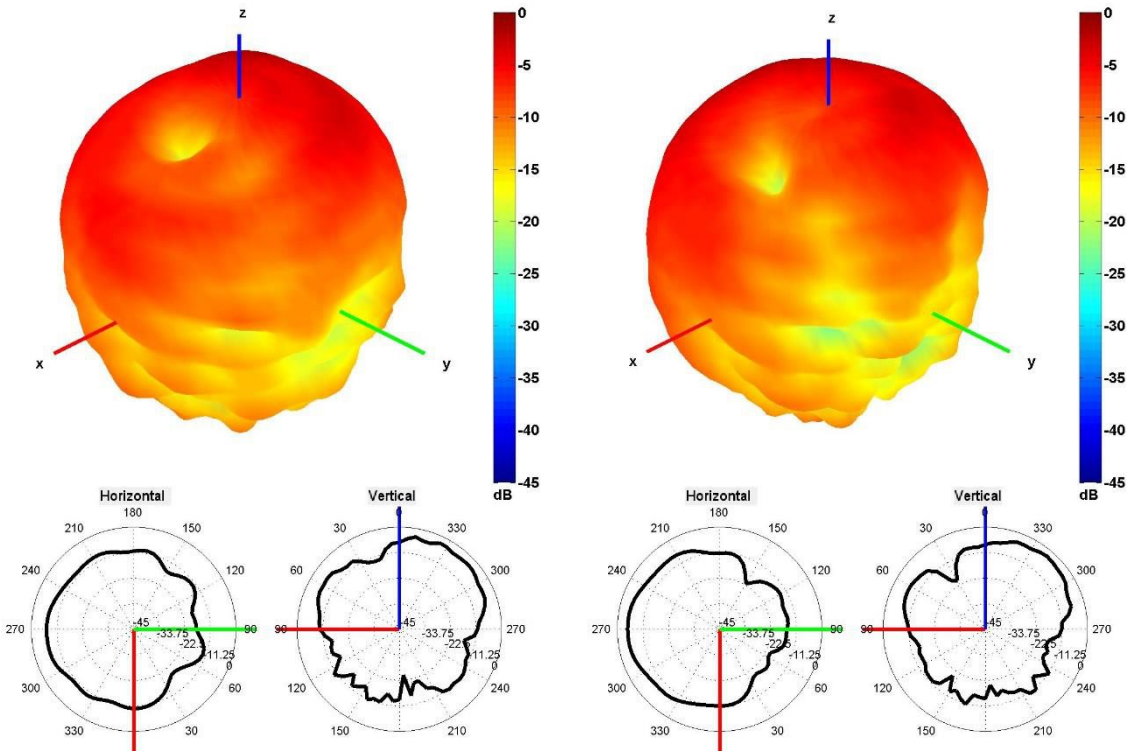

1750 and 1850 MHz Radiation pattern

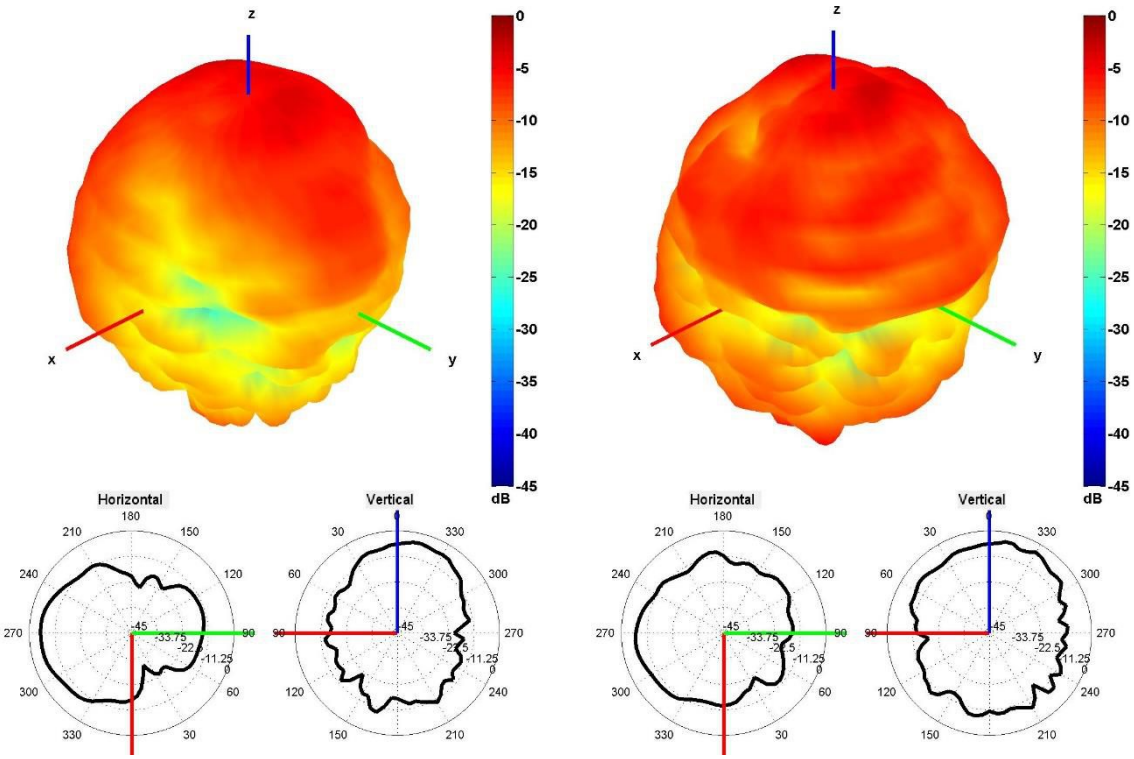

1950 and 2100 MHz Radiation pattern

4. Antenna drawings

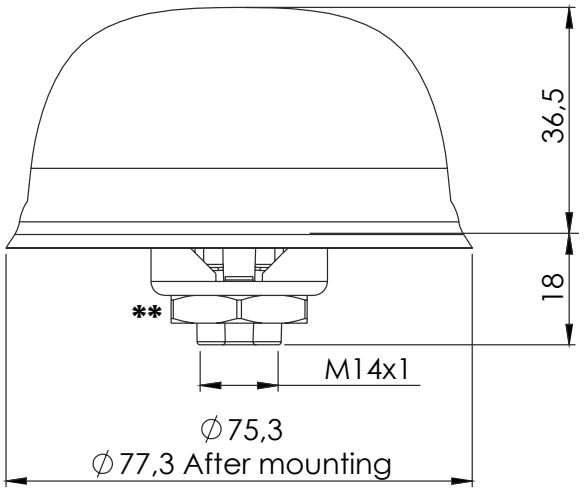

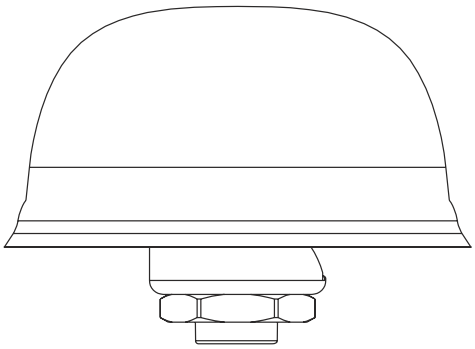

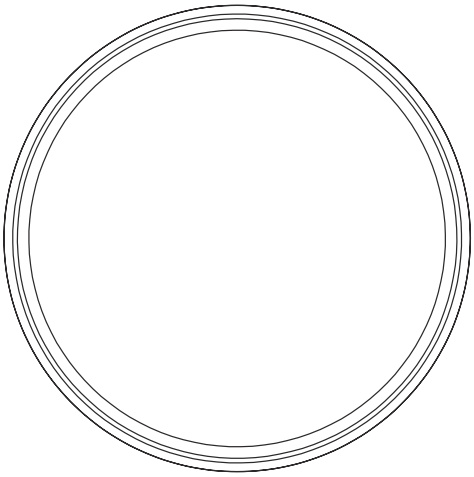

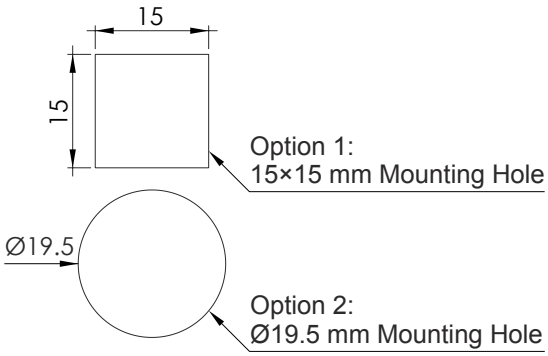

Note: Dimensions are in milimeters
***Dimensions are after mounting**
****Max. Torque= 6 Nm**

5. Antenna Images